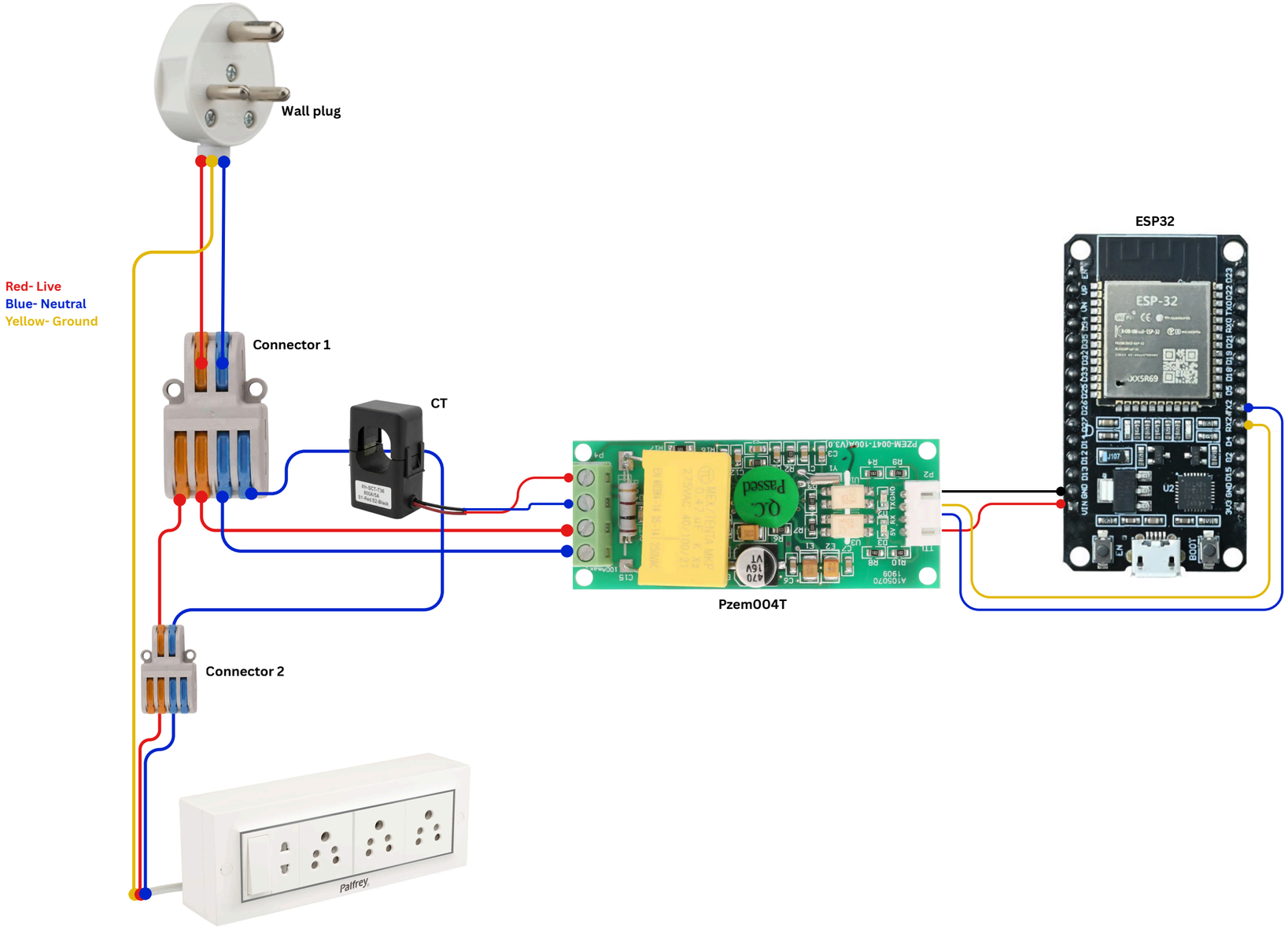
Wall plug
Red- Live
Blue- Neutral
Yellow- Ground
Connector 1
CT
ESP32
Pzem004T
Connector 2
Palfrey